PFC eSTORE
Clear Solutions Technology Company

www.pfcestore.com - 763-425-7890 / 800-328-2350

GRUNDFOS BOOSTER PUMP, 904LSS W/NBR SEAL, 3 PHASE 440-480V, BMHP 160-1

700 GPM @ 45 PSI | IP66 | 30HP | Victaulic Connection 6.6147" | 8" Pump | Straight Pipe Connections | Check lead time before ordering

The motor power ranges from 1HP to 124HP . The motor must be controlled by a VFD and protected by Pt100 sensors. The VFD is sold as a separate. We recommend a Grundfos CUE VFD; however, VFDs from alternative suppliers can be used as well.

SKU: 96293312
Stock: Out of stock contact us for lead time
Categories: Grundfos BM Booster Pumps

Model Number BMhp 160-1
Part Number 96293312

GALLERY IMAGES

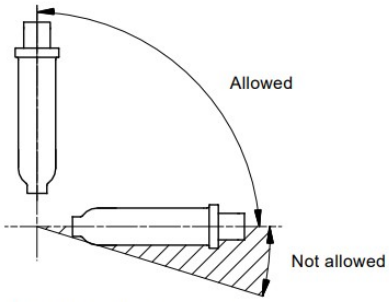

Fig. 1 Positional requirements

PRODUCT DESCRIPTION

Grundfos BM Pumps and BMhp booster modules are designed for pressure boosting, liquid transfer and circulation in systems with a high static pressure.

The pumps are suitable for pumping thin, non-explosive liquids, not containing abrasive particles or fibres. The liquid must not attack the pump materials chemically and mechanically.

The sound pressure level of BM 4" and BM and BMhp 6" booster modules is lower than 70 dB(A).
The sound pressure level of BM and BMhp 8" booster modules is lower than 80 dB(A).

Specs & Curve

Install Manual

ADDITIONAL INFORMATION

Weight	560 lbs
Dimensions	101 × 16 × 16 in
Best Efficiency Point	700 GPM @ 100 FTH
Wetted Material	904LSS-NBR