PFC eSTORE
Clear Solutions Technology Company

www.pfcestore.com - 763-425-7890 / 800-328-2350

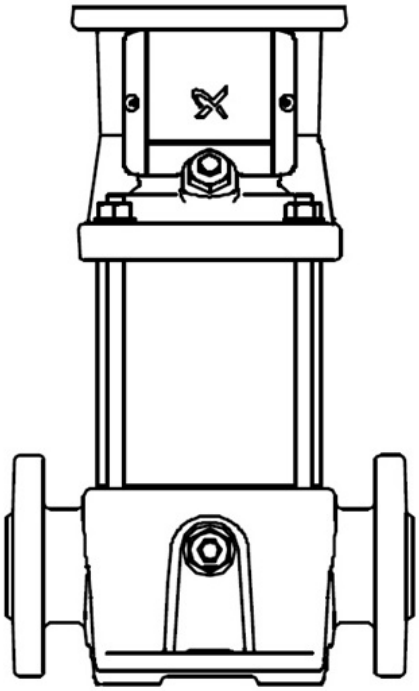

GRUNDFOS CR PUMP END CR 1S-25 A-FGJ-A-V-HQQV

5 GPM @ 190 PSI | 56C FRAME | WETTED MATERIAL CAST IRON, 304SS, VITON

Typical lead time 3 to 4 weeks

SKU: 96081113
Stock: Out of stock contact us for lead time
Categories: Grundfos CR Pump Ends

Part Number 96081113

PRODUCT DESCRIPTION

Grundfos multistage CR pump end

Spec Sheet & Curve

ADDITIONAL INFORMATION

Weight	76 lbs
Dimensions	36 × 16 × 16 in