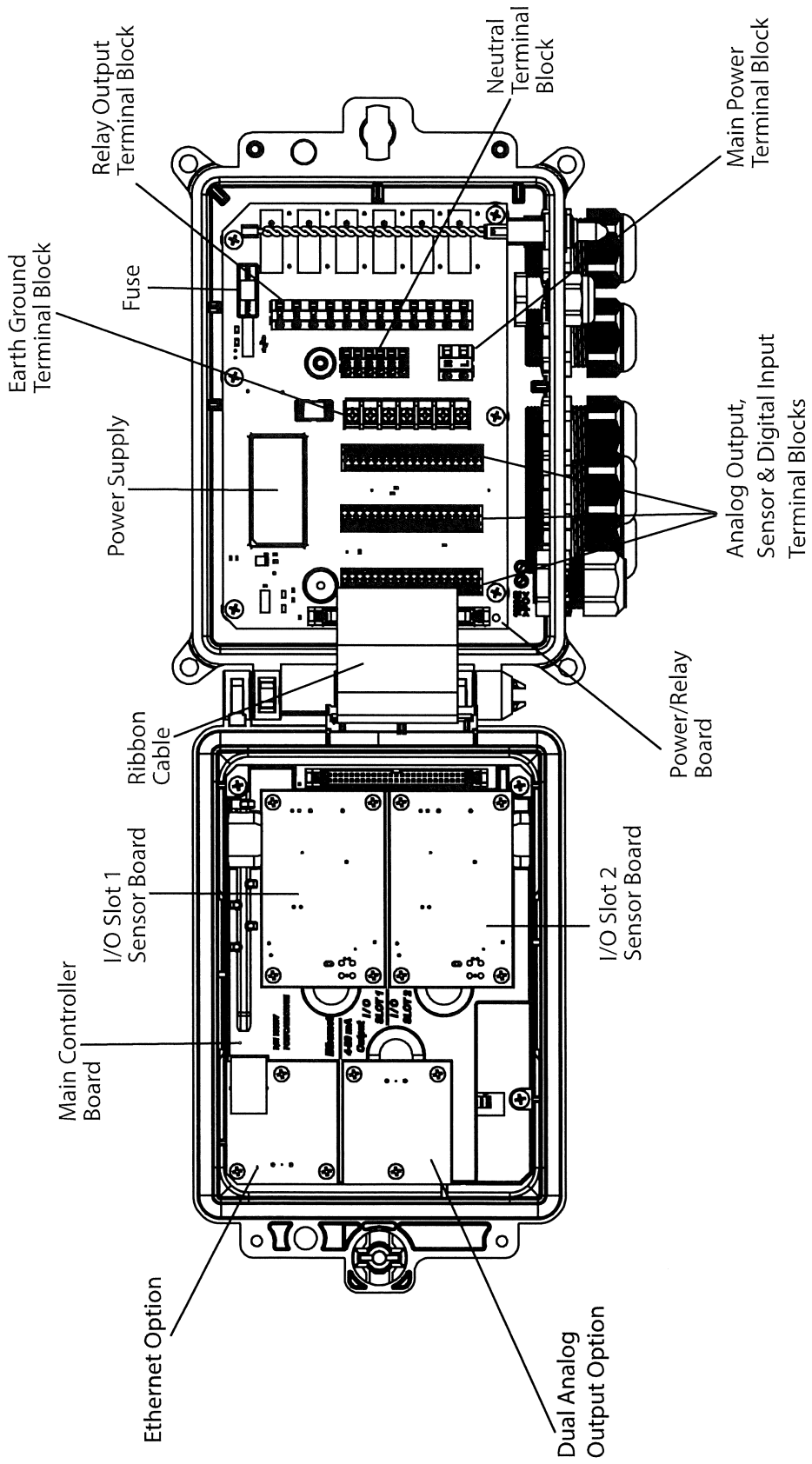

Figure 6 Parts Identification

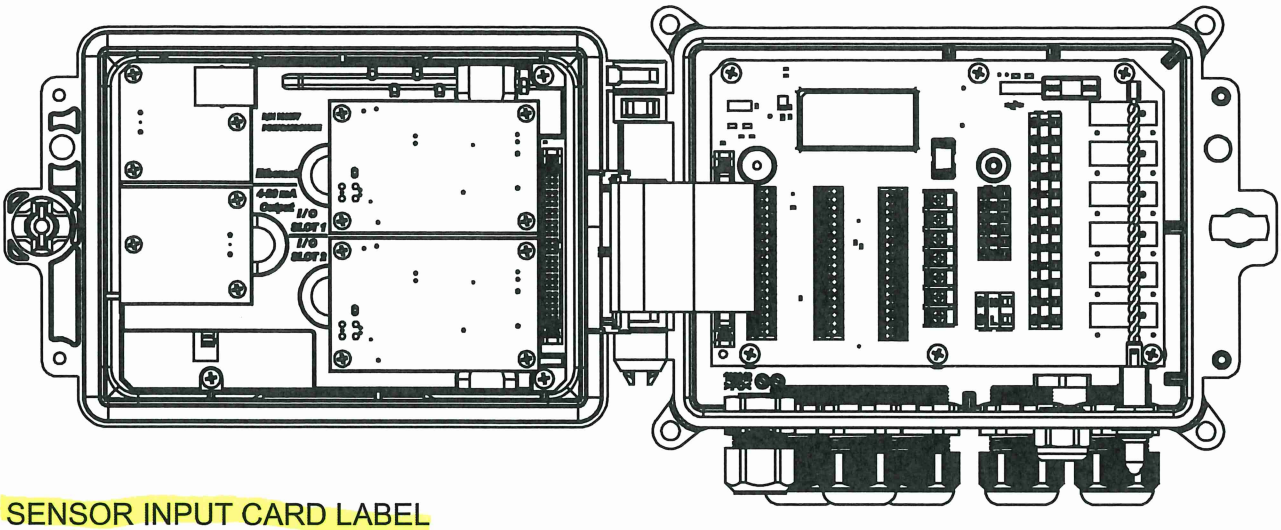

SENSOR INPUT CARD LABEL

	ECOND	CCOND	pH/ORP DIS
1	TEMP–	TEMP–	TEMP–
2	TEMP+	TEMP+	TEMP+
3	R-SHLD		IN–
4		RCV	IN+
5	RCV–		
6	RCV+		
7	X-SHLD	SHIELD	SHIELD
8			+5V
9			–5V
10	XMT+	XMT	
11	XMT–		
12	⏚		

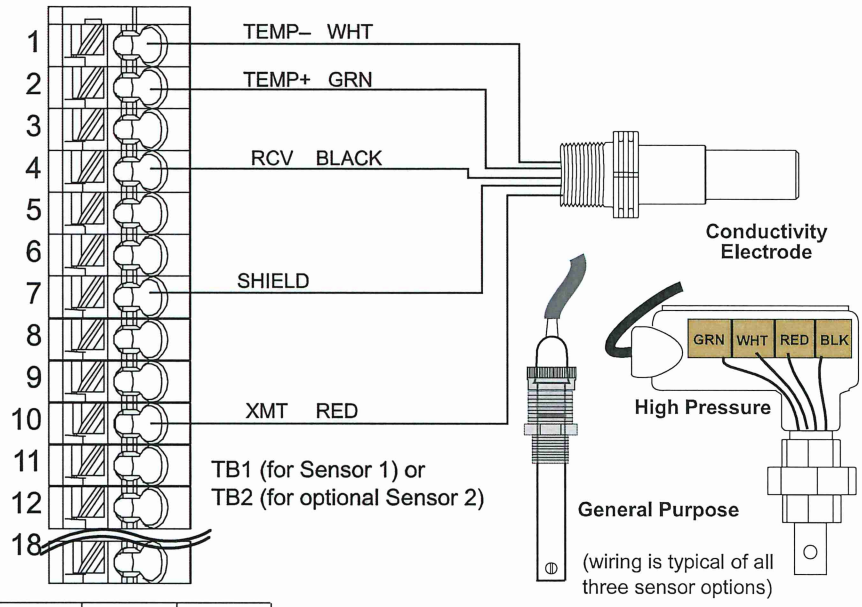

	CCOND	pH/ORP DIS	2 Wire Loop	2 Wire Pwrd	3 Wire	4 Wire
1	TEMP–	TEMP–				
2	TEMP+	TEMP+				
3	SHIELD	IN–				
4	RCV	IN+				
5		–5V				
6	XMT					
7		+5V				
8					COM(–)	24V(-)
9			+24V		+24V	+24V
10				XMTR–		XMTR–
11			XMTR–	XMTR+	XMTR+	XMTR+
12		SHIELD or use DI SHIELD (TB3 7-12)				

COMBINATION SENSOR/ANALOG CARD LABEL

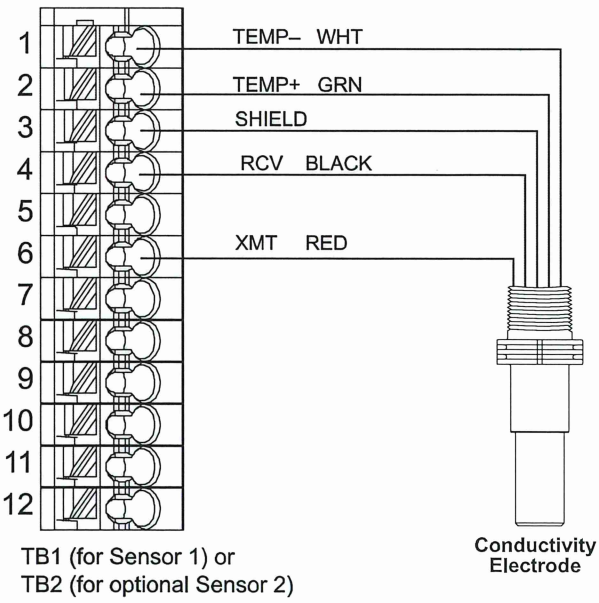

Figure 7 Contacting Conductivity Sensor Input Wiring

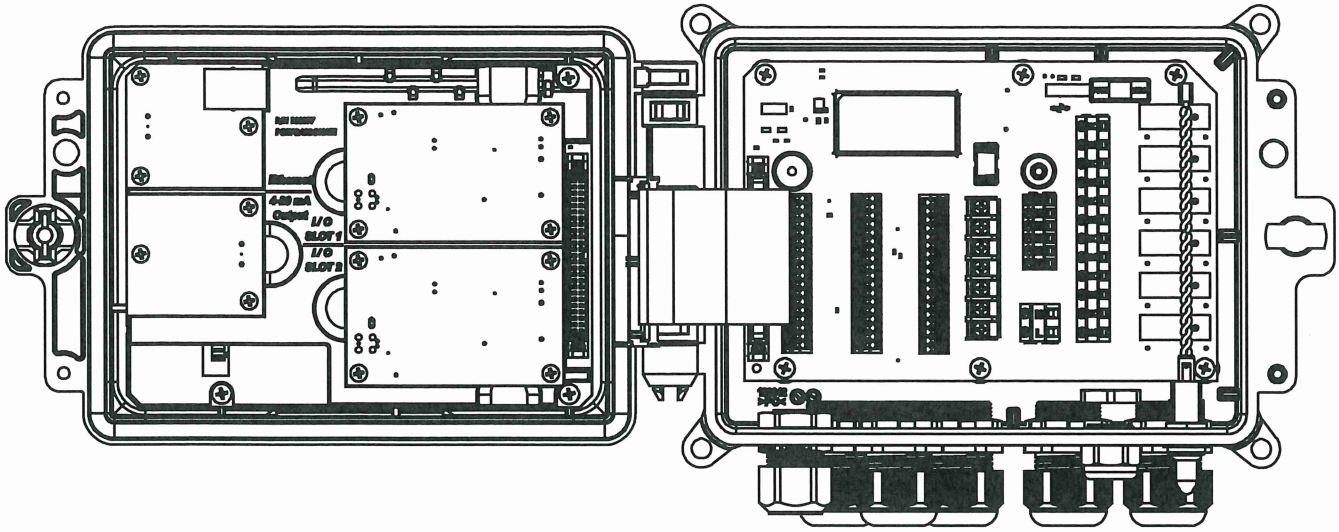

	ECOND	CCOND	pH/ORP DIS
1	TEMP–	TEMP–	TEMP–
2	TEMP+	TEMP+	TEMP+
3	R-SHLD		IN–
4		RCV	IN+
5	RCV–		
6	RCV+		
7	X-SHLD	SHIELD	SHIELD
8			+5V
9			–5V
10	XMT+	XMT	
11	XMT–		
12	⏚		

SENSOR LABEL

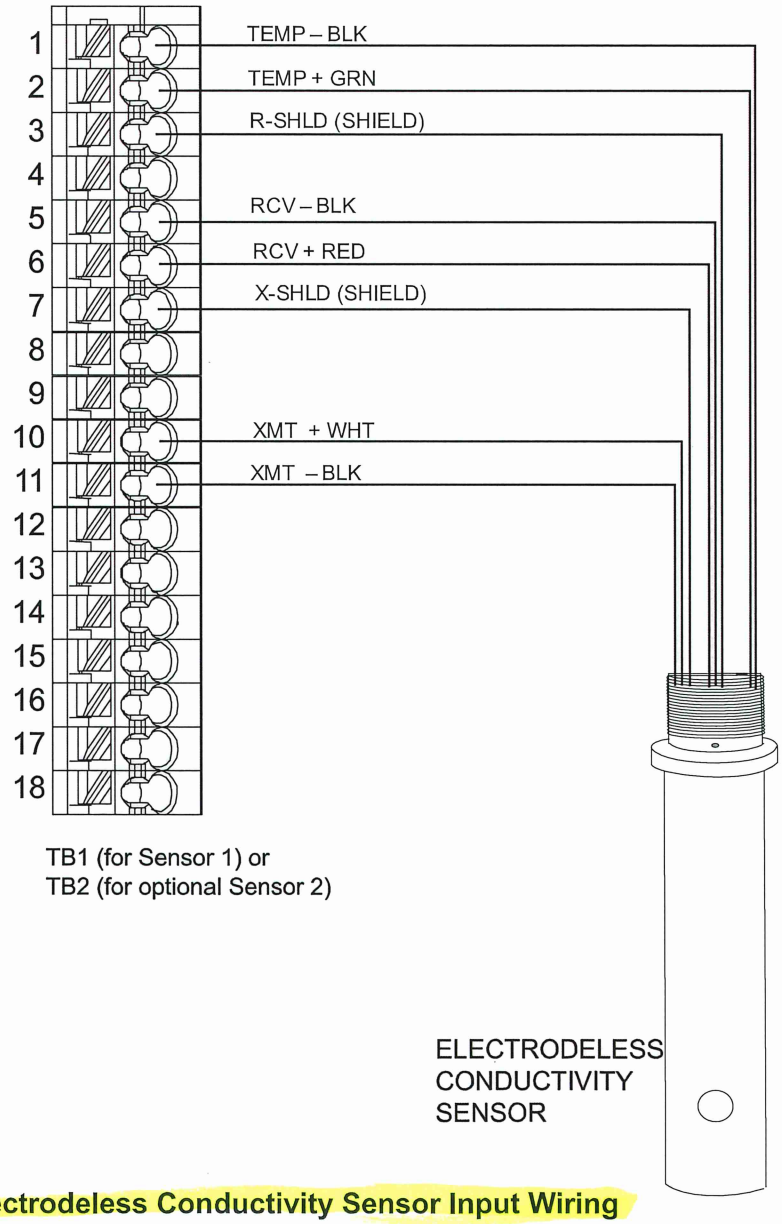

Figure 8 Electrodeless Conductivity Sensor Input Wiring

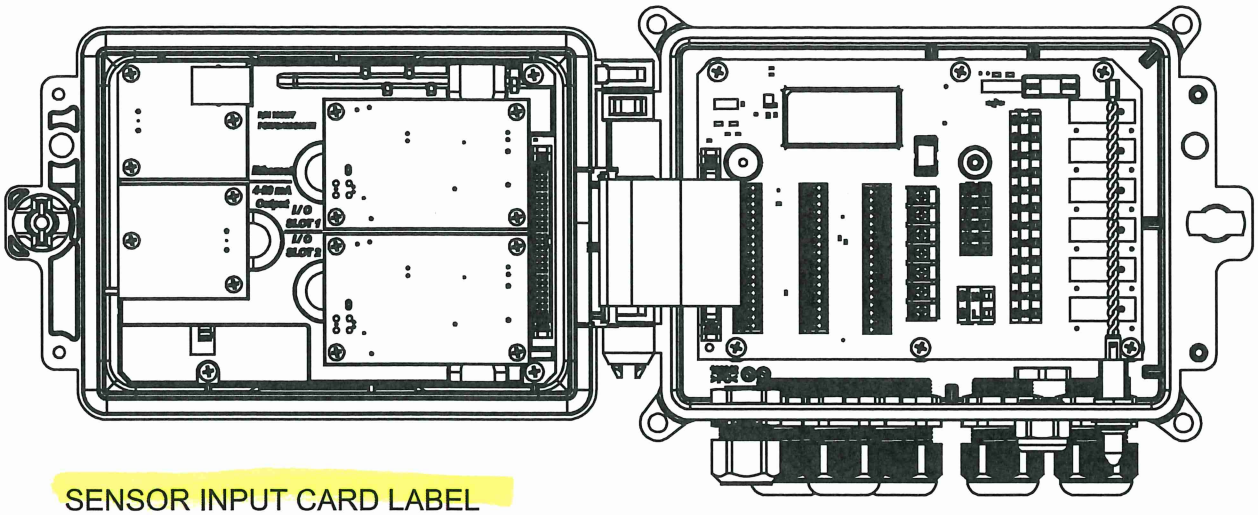

SENSOR INPUT CARD LABEL

	ECOND	CCOND	pH/ORP DIS
1	TEMP–	TEMP–	TEMP–
2	TEMP+	TEMP+	TEMP+
3	R-SHLD		IN–
4		RCV	IN+
5	RCV–		
6	RCV+		
7	X-SHLD	SHIELD	SHIELD
8			+5V
9			–5V
10	XMT+	XMT	
11	XMT–		
12	⏚		

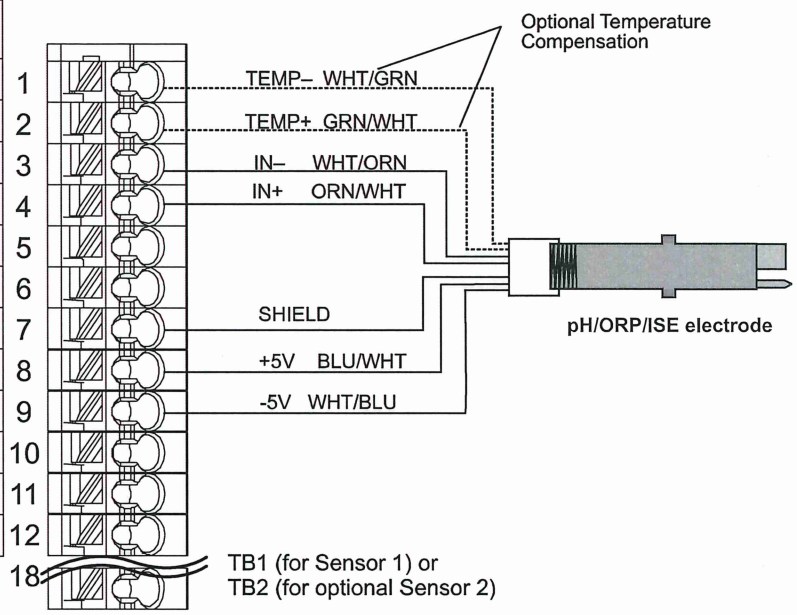

	CCOND	pH/ORP DIS	2 Wire Loop	2 Wire Pwrd	3 Wire	4 Wire
1	TEMP–	TEMP–				
2	TEMP+	TEMP+				
3	SHIELD	IN–				
4	RCV	IN+				
5		–5V				
6	XMT					
7		+5V				
8					COM(–)	24V(-)
9			+24V		+24V	+24V
10				XMTR–		XMTR–
11			XMTR–	XMTR+	XMTR+	XMTR+
12		SHIELD or use DI SHIELD (TB3 7-12)				

COMBINATION SENSOR/ANALOG CARD LABEL

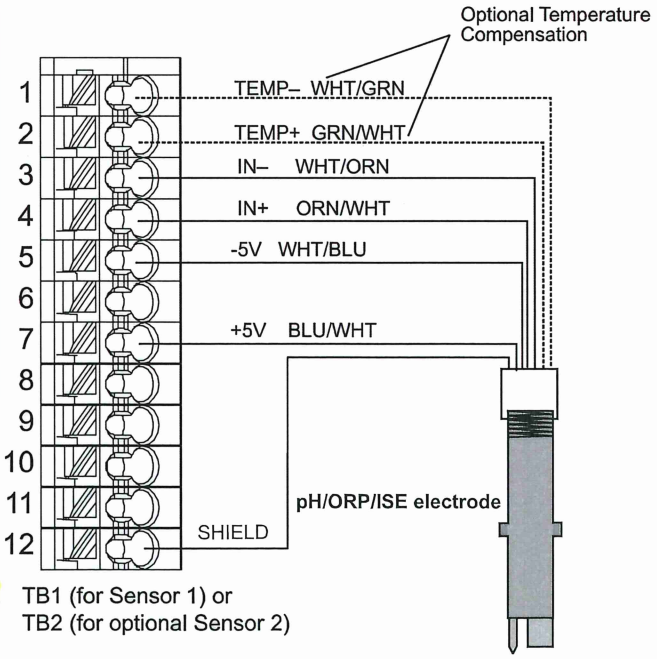

Figure 9 pH/ORP/ISE Sensor Input Wiring

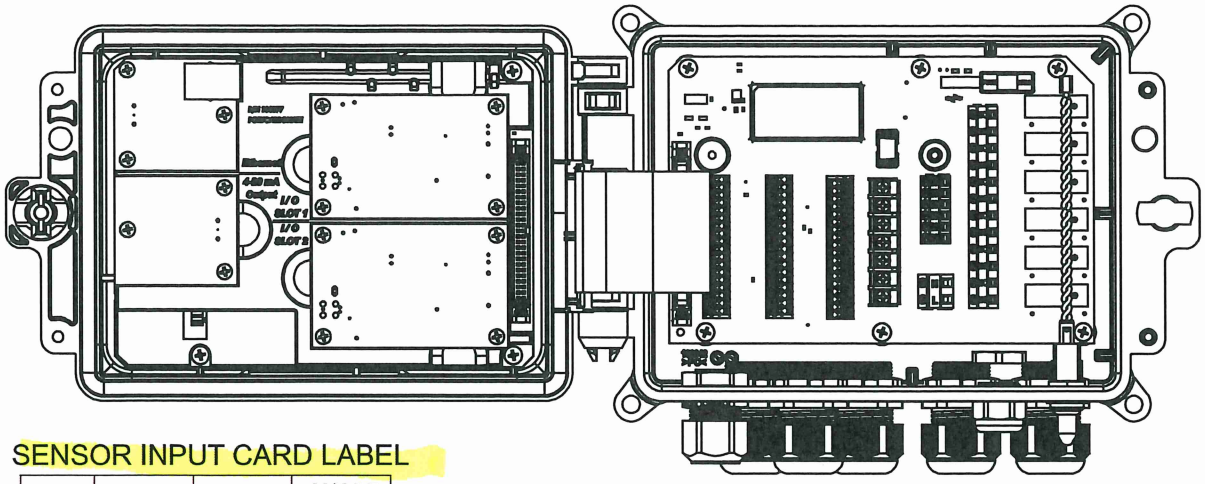

SENSOR INPUT CARD LABEL

	ECOND	CCOND	pH/ORP DIS
1	TEMP–	TEMP–	TEMP–
2	TEMP+	TEMP+	TEMP+
3	R-SHLD		IN–
4		RCV	IN+
5	RCV–		
6	RCV+		
7	X-SHLD	SHIELD	SHIELD
8			+5V
9			–5V
10	XMT+	XMT	
11	XMT–		
12	⏚		

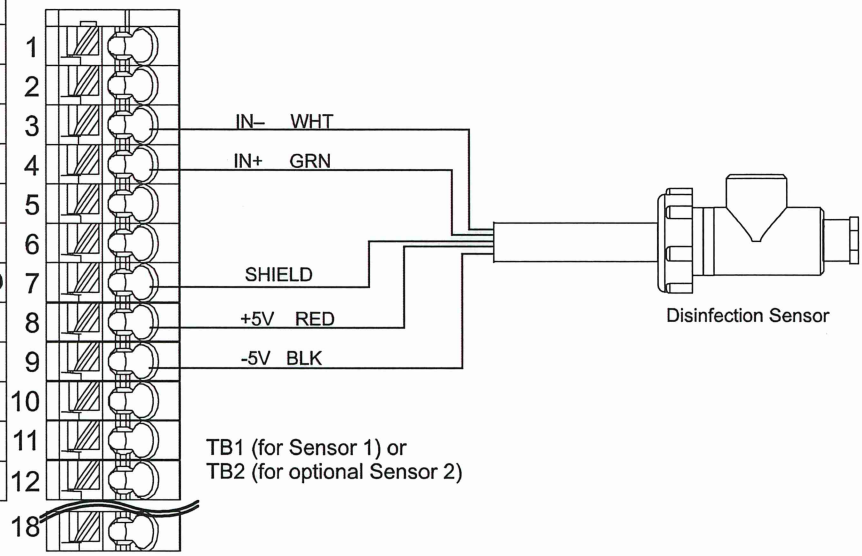

	CCOND	pH/ORP DIS	2 Wire Loop	2 Wire Pwrd	3 Wire	4 Wire
1	TEMP–	TEMP–				
2	TEMP+	TEMP+				
3	SHIELD	IN–				
4	RCV	IN+				
5		–5V				
6	XMT					
7		+5V				
8					COM(–)	24V(-)
9			+24V		+24V	+24V
10				XMTR–		XMTR–
11			XMTR–	XMTR+	XMTR+	XMTR+
12		SHIELD or use DI SHIELD (TB3 7-12)				

COMBINATION SENSOR/ANALOG CARD LABEL

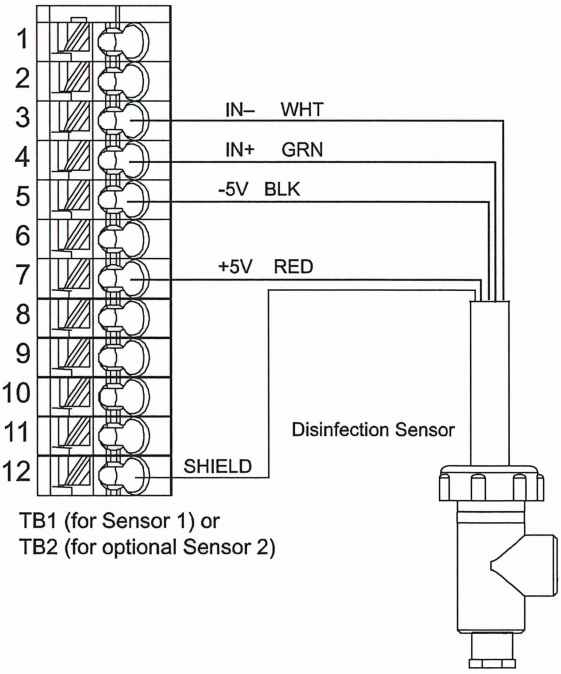

Figure 10 Disinfection Sensor Input Wiring

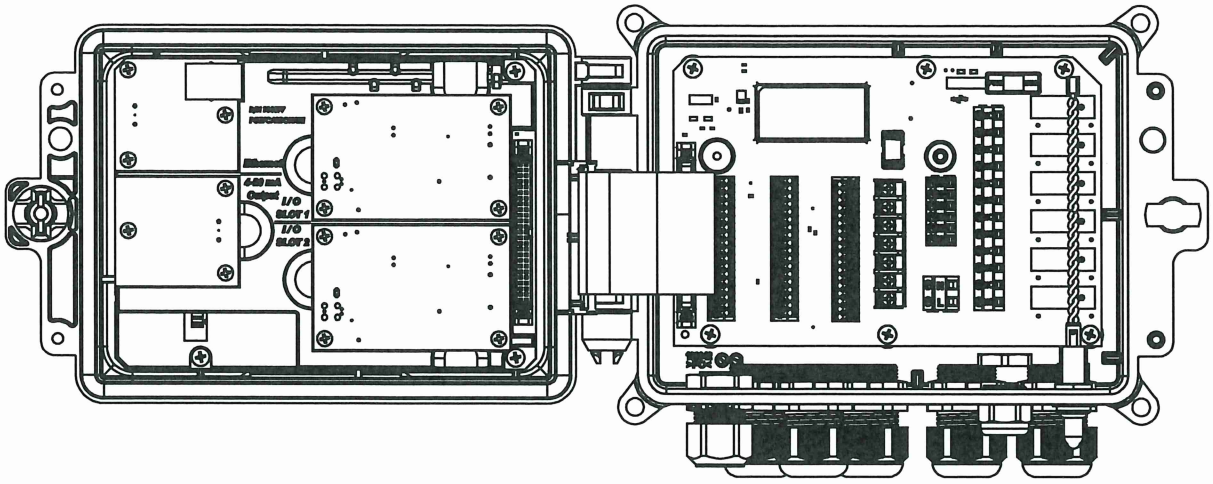

TB Pin#	Type of Transmitter				AI#
	2 Wire Loop	2 Wire Powered	3 Wire	4 Wire	
1	+24V		+24V	+24V	1
2	●┐		●┐	24V(–)	
3	●┘	XMTR–	●┘	XMTR–	
4	XMTR–	XMTR+	XMTR+	XMTR+	
5			COM(-)		
6	SHIELD	SHIELD	SHIELD	SHIELD	
7	+24V		+24V	+24V	2
8	●┐		●┐	24V(–)	
9	●┘	XMTR–	●┘	XMTR–	
10	XMTR–	XMTR+	XMTR+	XMTR+	
11			COM(-)		
12	SHIELD	SHIELD	SHIELD	SHIELD	

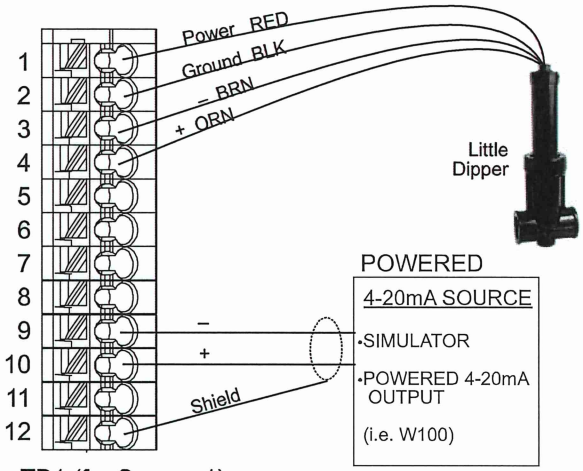

TB1 (for Sensor 1) or
TB2 (for optional Sensor 2)

TB Pin#	Type of Transmitter				AI#
	2 Wire Loop	2 Wire Powered	3 Wire	4 Wire	
1	+24V		+24V	+24V	1
2	●┐		●┐	24V(–)	
3	●┘	XMTR–	●┘	XMTR–	
4	XMTR–	XMTR+	XMTR+	XMTR+	
5			COM(-)		
6	SHIELD	SHIELD	SHIELD	SHIELD	
7	+24V		+24V	+24V	2
8	●┐		●┐	24V(–)	
9	●┘	XMTR–	●┘	XMTR–	
10	XMTR–	XMTR+	XMTR+	XMTR+	
11			COM(-)		
12	SHIELD	SHIELD	SHIELD	SHIELD	

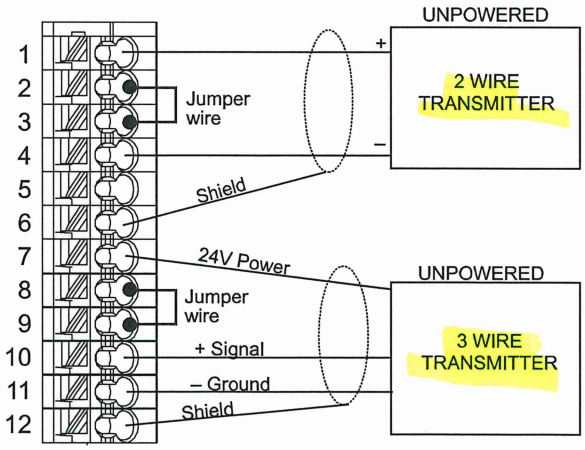

TB1 (for Sensor 1) or
TB2 (for optional Sensor 2)

Figure 11 Dual 4-20mA Sensor Input Wiring

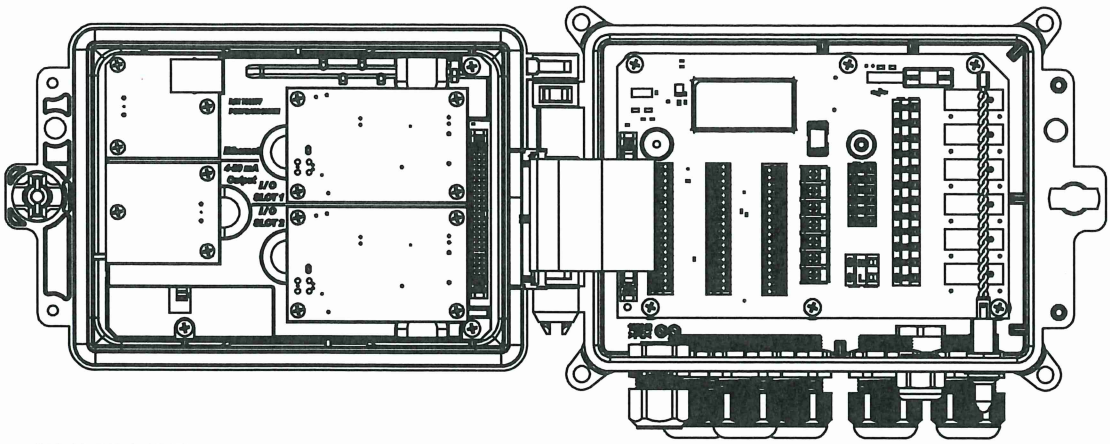

SENSOR LABEL

TB1 (for Sensor 1) or
TB2 (for optional Sensor 2)

	CCOND	pH/ORP DIS	2 Wire Loop	2 Wire Pwrd	3 Wire	4 Wire	
1	TEMP–	TEMP–					1
8					COM(–)	24V(-)	8
9			+24V		+24V	+24V	9
10				XMTR–		XMTR–	10
11			XMTR–	XMTR+	XMTR+	XMTR+	11
12		SHIELD or use DI SHIELD (TB3 7-12)					12

BLK
RED
BRN
ORN

LITTLE DIPPER 4 WIRE

	CCOND	pH/ORP DIS	2 Wire Loop	2 Wire Pwrd	3 Wire	4 Wire	
1	TEMP–	TEMP–					1
8					COM(–)	24V(-)	8
9			+24V		+24V	+24V	9
10				XMTR–		XMTR–	10
11			XMTR–	XMTR+	XMTR+	XMTR+	11
12		SHIELD or use DI SHIELD (TB3 7-12)					12

POWERED 2 WIRE

4-20mA SOURCE
•SIMULATOR
•POWERED 4-20mA OUTPUT
(e.g. W100)

–
+
SHIELD

	CCOND	pH/ORP DIS	2 Wire Loop	2 Wire Pwrd	3 Wire	4 Wire	
1	TEMP–	TEMP–					1
8					COM(–)	24V(-)	8
9			+24V		+24V	+24V	9
10				XMTR–		XMTR–	10
11			XMTR–	XMTR+	XMTR+	XMTR+	11
12		SHIELD or use DI SHIELD (TB3 7-12)					12

UNPOWERED

2 WIRE
LOOP POWERED
TRANSMITTER

+
–
SHIELD

	CCOND	pH/ORP DIS	2 Wire Loop	2 Wire Pwrd	3 Wire	4 Wire	
1	TEMP–	TEMP–					1
8					COM(–)	24V(-)	8
9			+24V		+24V	+24V	9
10				XMTR–		XMTR–	10
11			XMTR–	XMTR+	XMTR+	XMTR+	11
12		SHIELD or use DI SHIELD (TB3 7-12)					12

UNPOWERED

3 WIRE
TRANSMITTER

– GROUND
24V POWER
+SIGNAL
SHIELD

NOTE: To program the combination card analog input, you must go to Inputs menu, then enter the analog input (S13 or S23), scroll down to Transmitter, and select the type of transmitter from the list.

Figure 12 Combination Card 4-20mA Dual Sensor Input Wiring (was 11a)

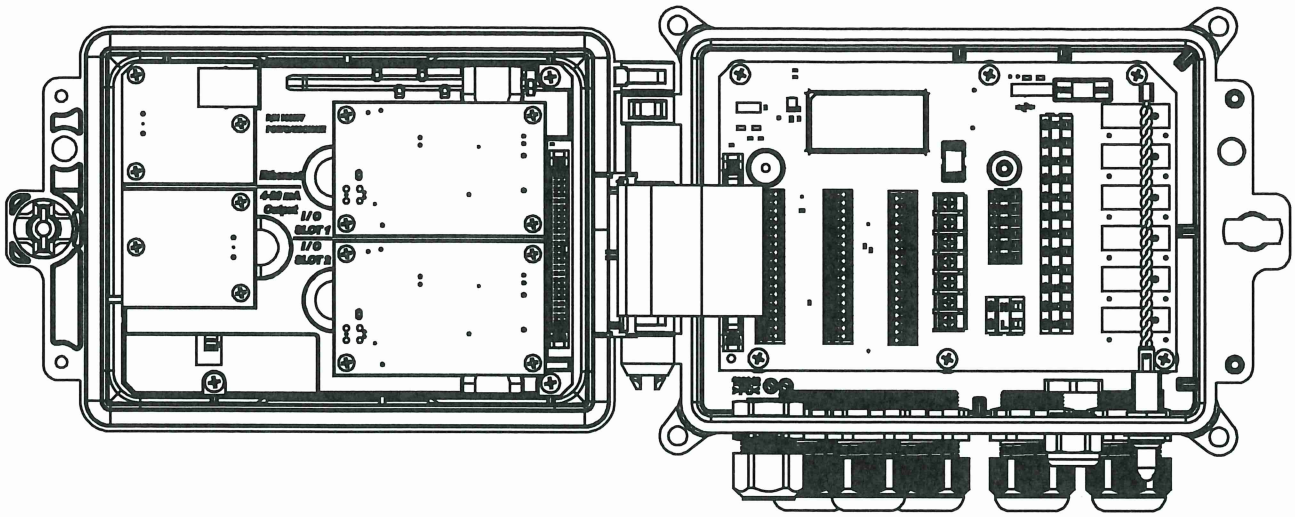

1	SEE SENSOR 1 LABEL	1	DIG IN 3+	1	SEE SENSOR 2 LABEL
2		2	DIG IN 3–	2	
3		3	+9 VDC	3	
4		4	DIG IN 4+	4	
5		5	DIG IN 4–	5	
6		6	+9 VDC	6	
7		7	DI SHIELD	7	
8		8		8	
9		9		9	
10		10		10	
11		11		11	
12		12		12	
13	DIG IN 1+	13	DIG IN 5+	13	DIG IN 2+
14	DIG IN 1–	14	DIG IN 5–	14	DIG IN 2–
15	+9 VDC	15	+9 VDC	15	+9 VDC
16	4-20 OUT1+	16	DIG IN 6+	16	4-20 OUT2+
17	4-20 OUT1–	17	DIG IN 6–	17	4-20 OUT2–
18	SHIELD	18	+9 VDC	18	SHIELD
TB1		TB3		TB2	

SAFETY COVER LABEL

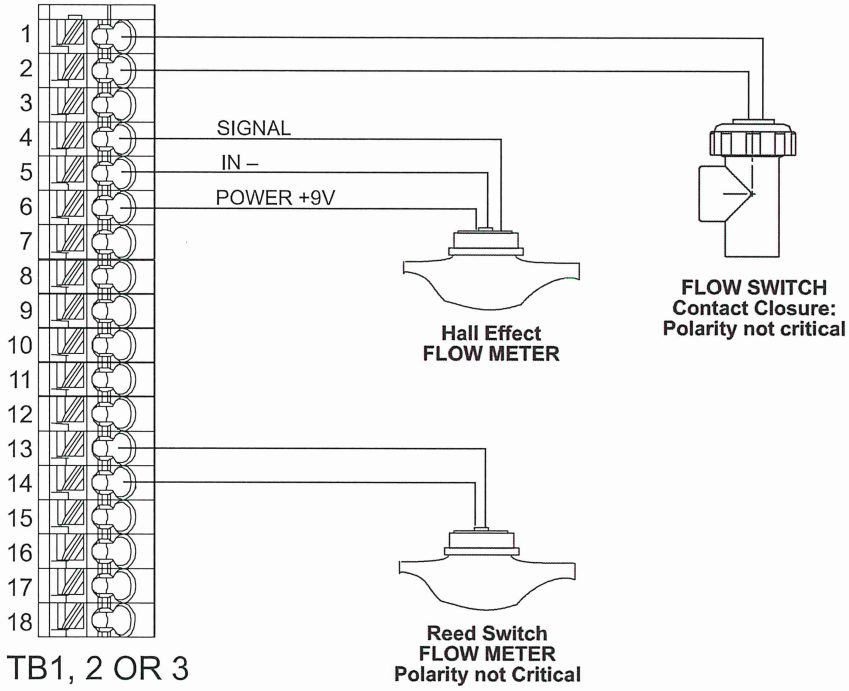

TB1, 2 OR 3
(TB 3 SHOWN)

Figure 13 Digital Input Wiring

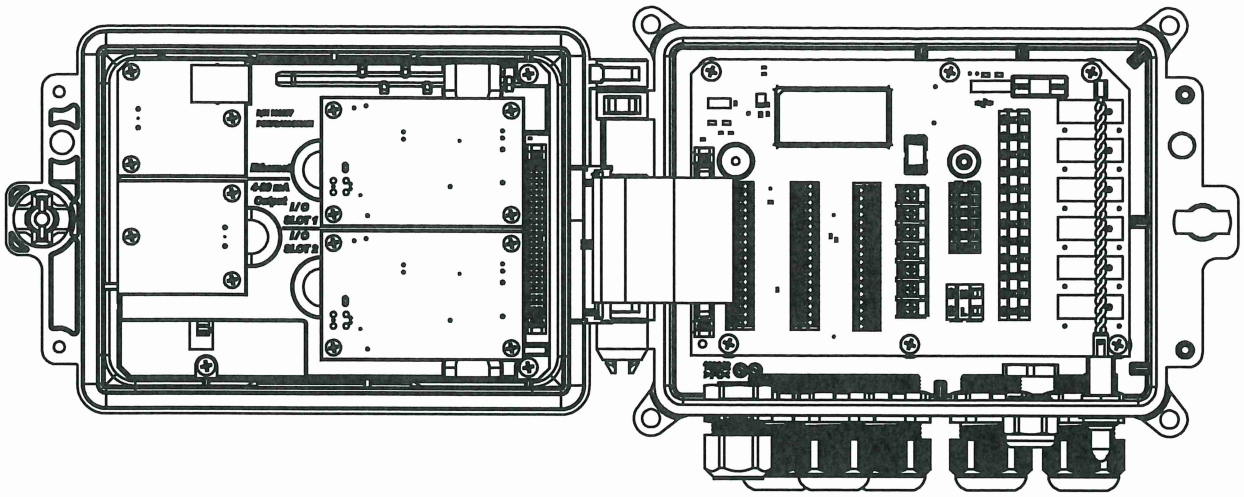

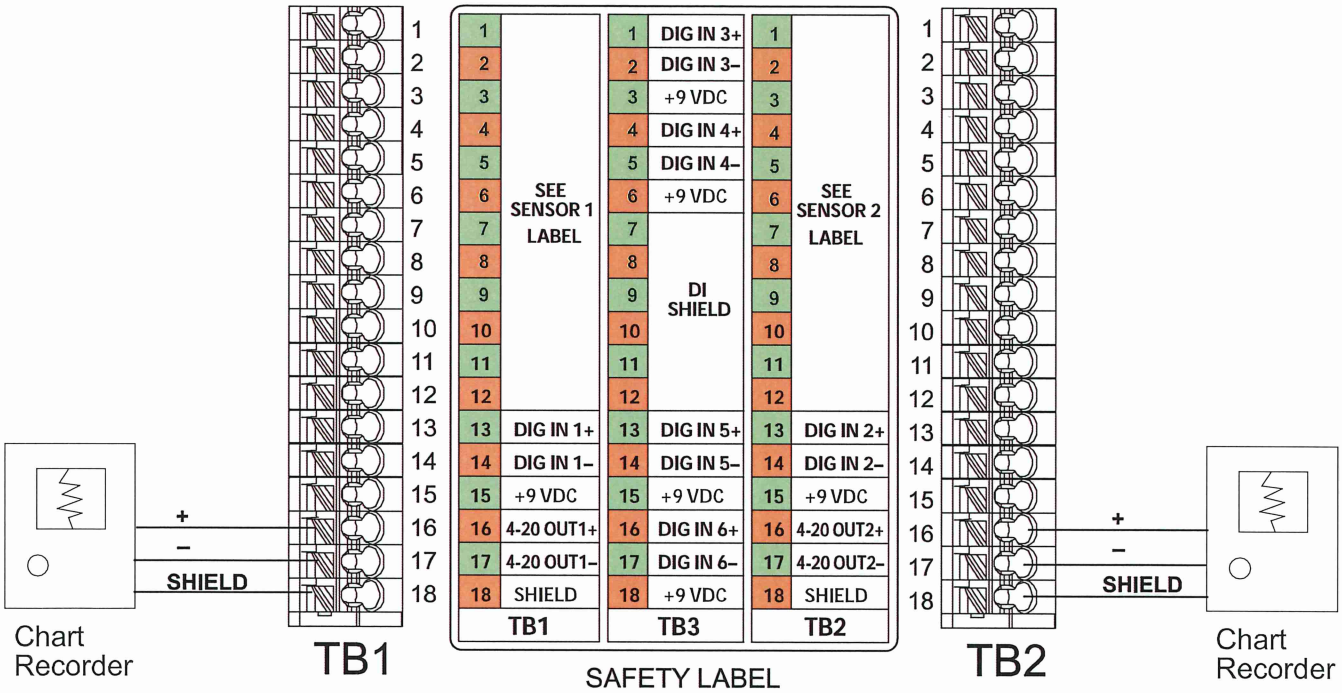

Figure 18 Analog Output Wiring