NOVADRY

Leybold

Vacuum solutions for food processing and packaging.

FOOD SAFETY 100% OIL FREE

Dry Screw Vacuum Pumps

Vacuum is an important and widely-used tool in the food industry. Until today, oil-sealed rotary vane pumps were the norm. However, the use of these pumps can be risky, since the oil in the pump can end up polluting your workspace or (even worse!) your food. To avoid these risks and **to ensure product freshness, Leybold developed the "NOVADRY". This 100% oil-free vacuum pump has revolutionized the market.** The following key features will demonstrate why:

Robust design

NOVADRY was developed with all your applications in mind. It can handle water vapor, droplets, organic acids and even particles. NOVADRY's robustness is based on, for example, its innovative belt drive and self-draining pump design.

Extended uptime

NOVADRY's uptime has been maximized by reducing maintenance requirements. Its only replaceable parts, the belt and bearings, have been optimized for serviceability and extended service intervals.

Fast & consistent

NOVADRY is recognized for its high performance, which is consistent over time and over all working pressures. This consistency is a direct consequence of its wear-free dry screw design.

Low TCO

NOVADRY offers energy savings with an energy-efficient design. Its air-cooled configuration, easy setup and reduced maintenance needs offer you a reduced Total Cost of Ownership.

Optimized noise level

NOVADRY features a quiet operation and pleasant sound, with no rattling or high-pitched noises. NOVADRY contributes to a pleasant working environment.

100% Food safety

NOVADRY combines a the concept of a 100% oil-free pump with a design complies with basic hygienic principles. This makes NOVADRY a vacuum benchmark for food safety! Say goodbye to the risk of contaminating your processed foods with pump oil!

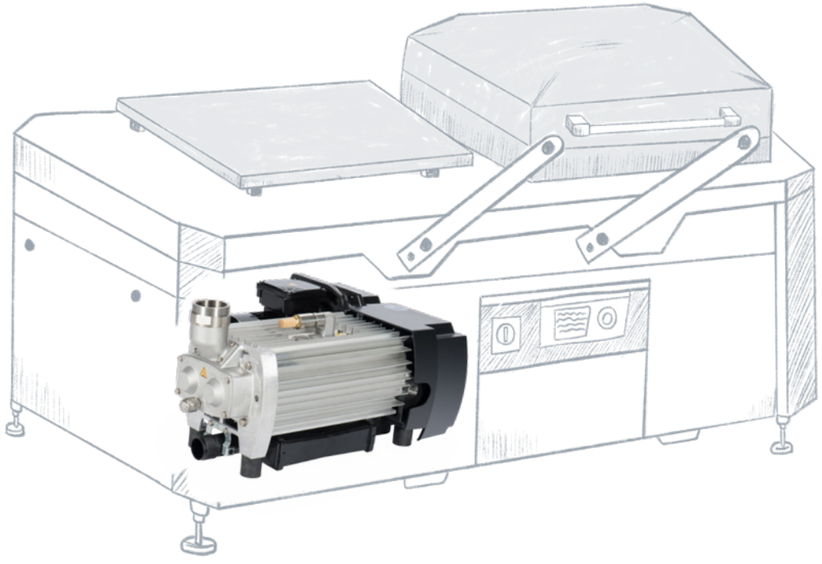

Double Chamber Packaging Machine

Vacuum packaging is used to remove air which leads to an extended shelf life for food. Challenges for vacuum pumps in packaging machines, include frequent pump downs and the built-in use of the pump.

NOVADRY offers short pump down times, even until the lowest pressures.

NOVADRY's compact design & optimized noise level make it ideal for being built in.

FOOD SAFETY 100% OIL FREE

NOVADRY is 100% oil free and won't emit oil into the environment via the exhaust.

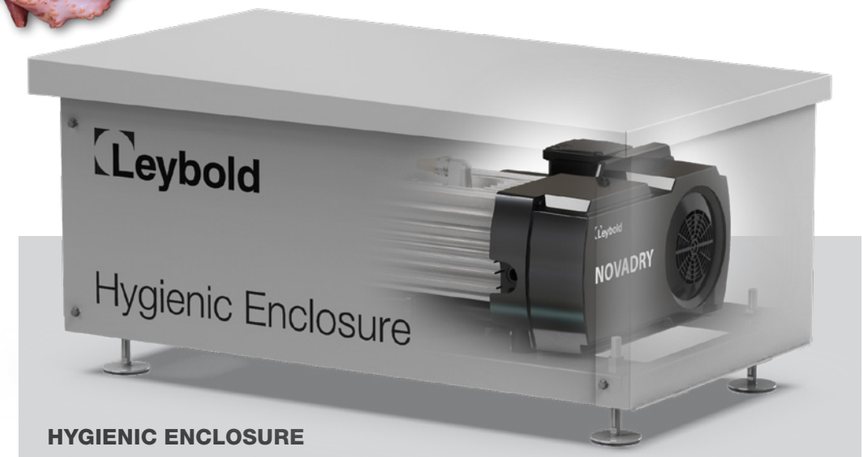

HYGIENIC ENCLOSURE
NOVADRY is the ideal choice, even for the harshest applications. The optional stainless steel DIY enclosure kit allows the NOVADRY to withstand your daily wash downs, even with harsh industrial cleaners.

Tumbler

Vacuum tumbling is a widely-used method, e.g., for marinating meat. Vacuum supports the meat's absorption of the marinade and enhances the product's taste, color and texture. Process ingredients and rough operating pressures make tumbling a real challenge for oilsealed vane pumps, resulting in high maintenance efforts.
NOVADRY is specially designed for these challenges:

NOVADRY can handle heavy types of contamination such as marinade, oils, etc.

NOVADRY's compact design & optimized noise level make it ideal for being built in.

FOOD SAFETY 100% OIL FREE

NOVADRY is completely oil free, so there's no chance for oil to back up into the tumbler.

Thermoformer

Thermoformers are highly efficient & sophisticated machines for the fast packaging of a wide variety of food products. Packaging can vary from standard vacuum packs to skin and MAP packs. NOVADRY distinguishes itself clearly: This application's versatility and required fast cycle-times are a challenge for vacuum çpumps.

NOVADRY works effciently at any operating pressure.

NOVADRY guarantees maximum uptime and high yields for heavily-used machines.

FOOD SAFETY 100% OIL FREE

NOVADRY ensures a high level of food safety, even for high output.

Stuffer

Stuffer machines are used to produce a wide range of food products like sausage and dough. Vacuum helps make a better product by removing air and improving texture. The main vacuum pump challenges include the built-in use and possible ingestion of process ingredients. NOVADRY is perfectly equipped for these challenges:

NOVADRY's sturdy dry screw principle is highly resistant to the ingestion of process media.

NOVADRY was developed to be built in. Service requirements and TCO are thus optimized.

FOOD SAFETY 100% OIL FREE

NOVADRY is 100% oil free, which avoids oil leakages via the bottom of your stuffer.

NOVADRY's sturdy dry screws are made for all F&P applications and guarantee a stable performance over the entire lifecycle.
Scan the QR-code to have a closer look.

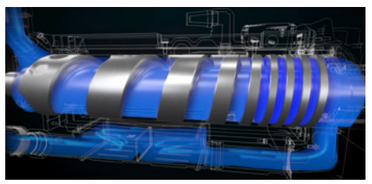

Pumping Speed

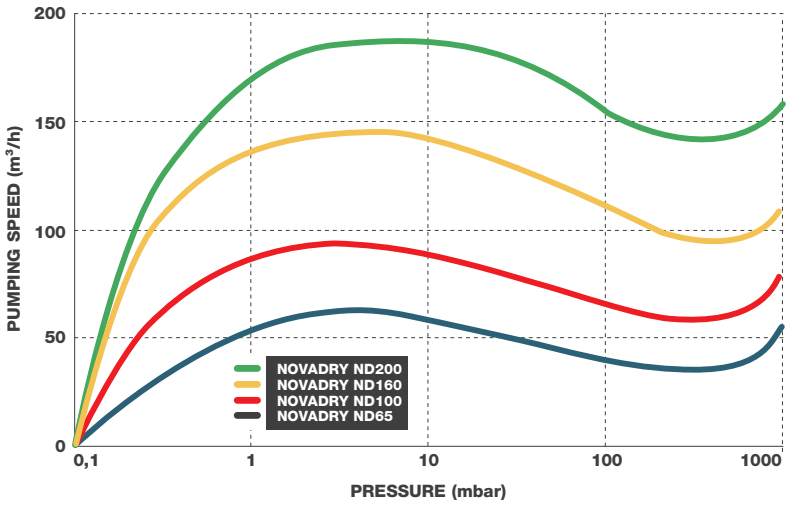

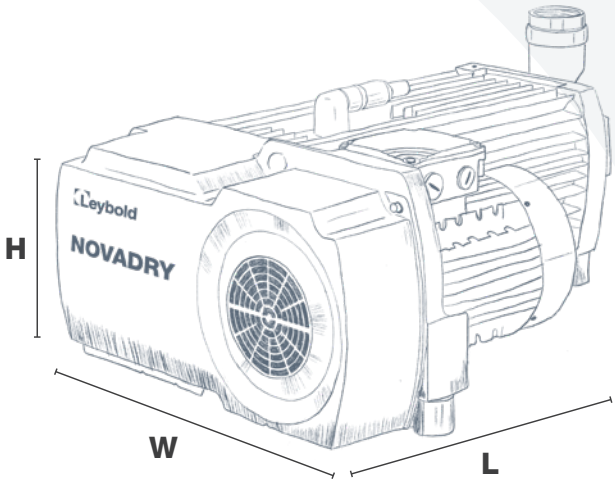

Technical Data		NOVADRY			
		ND 65	ND 100	ND 160	ND 200
Max. pumping speed	m^3 / h	63	96	138	175
Ultimate pressure without gas ballast	mbar	0.1			
Max. permissible outlet pressure (rel. to ambient)	mbar	200			
Max. permissible inlet pressure	mbar	1050			
Water vapor tolerance with gas ballast	mbar	60			
Water vapor capacity with gas ballast	kg/h	1.9	2.9	5.2	6.9
Noise level at ultimate pressure (50/60 Hz)*	dB(A)	67 / 70		70 / 73	
Permissible ambient temperature	°C	0 - 40			
Motor power	kW	1.5	2.2	3.0	4.0
Protection class		IP 55			
Dimensions [L x W x H]	mm	630 x 488 x 315	722 x 488 x 315	920 x 488 x 315	
Weight	kg	85	95	105	115
In- & outlet connection		G 2“ (In) G 1 1/2“ (Out)			

* According to DIN EN ISO 2151

Ordering Information	ND 65	ND 100	ND 160*	ND 200*
50 Hz, 200/400 V ±10 %, 3 ph	111065N10	111100N10	111160N10	111200N10
60 Hz, 230/460 V ±10 %, 3 ph	111065N11	111100N11	111160N11	111200N11
60 Hz, 200/380 V ±10 %, 3 ph	111065N21	111100N21	111160N21	111200N21
Outlet adaptor G1 1/2	111005A32			
Flushing Kit	111005A00			
Purge Upgrade Kit	111005A01			
Soft Starter VD/ND, ≥ 11A, 110-230 V AC			111005A65	
Soft Starter VD/ND, ≥ 11A, 24 V DC			111005A66	
Soft Starter VD/ND, ≥ 19A, 110-230 V AC			111005A67	
Soft Starter VD/ND, ≥ 19A, 24 V DC			111005A68	

* Soft starter mandatory

Leybold

Pioneering products. Passionately applied.

3611 0439 02 - EN 06/2023
Technical alterations reserved.