Liquid Level Switch

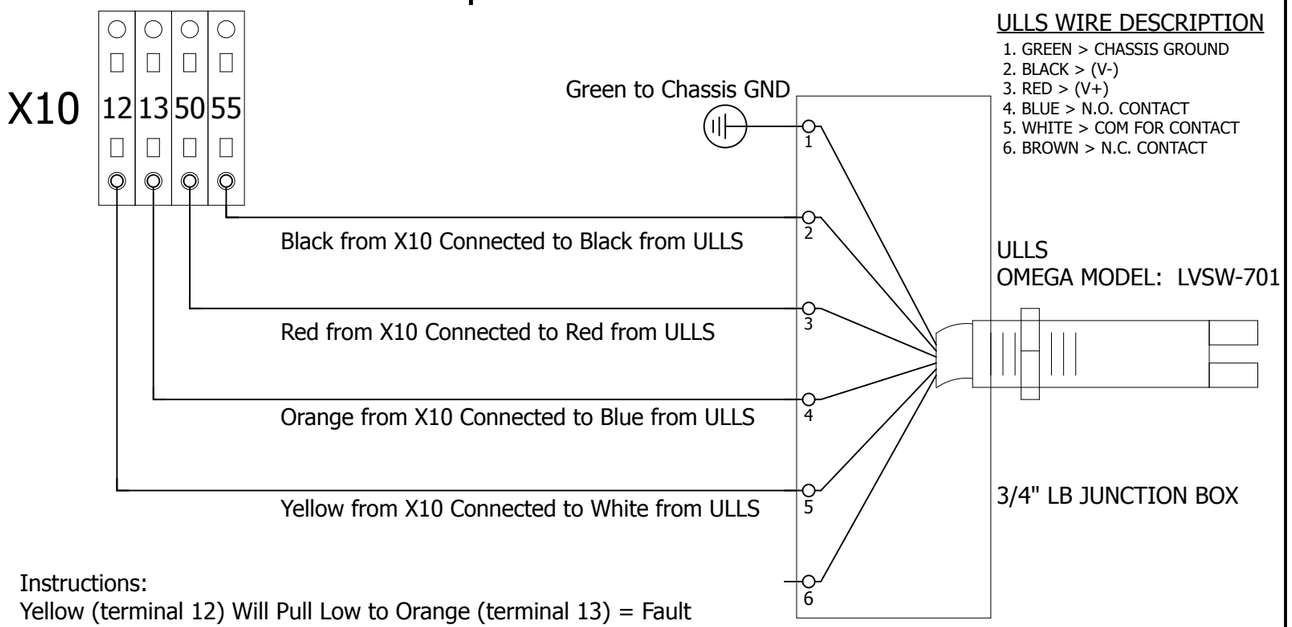

Instructions:
Yellow (terminal 12) Will Pull Low to Orange (terminal 13) = Fault

Liq-Tec

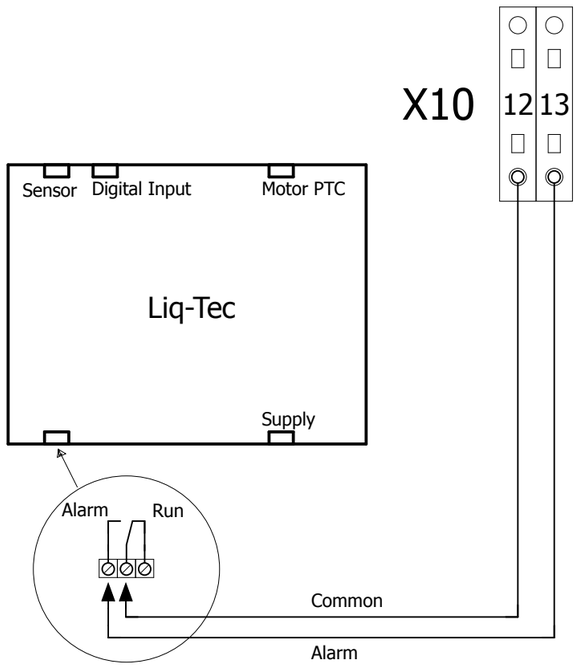

Suction Transducer

Danfoss Model: MBS 3000

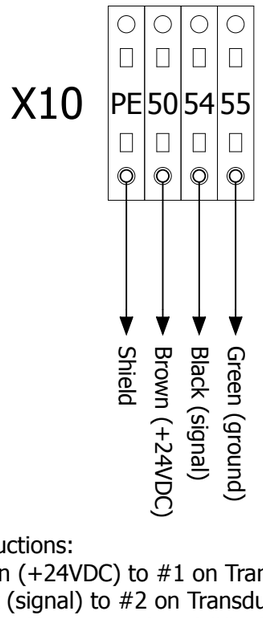

Instructions:
Brown (+24VDC) to #1 on Transducer (Supply)
Black (signal) to #2 on Transducer (Common)
Suction Transducer is a 4-20mA device

Discharge Transducer

Danfoss Model: MBS 3000

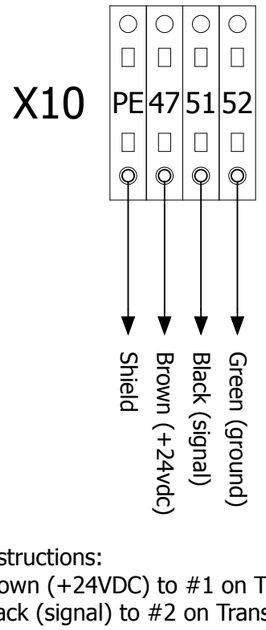

Instructions:
Brown (+24VDC) to #1 on Transducer (Supply)
Black (signal) to #2 on Transducer (Common)
Discharge Transducer is a 4-20mA device

Redundant Discharge Transducer

Danfoss Model: MBS 3000

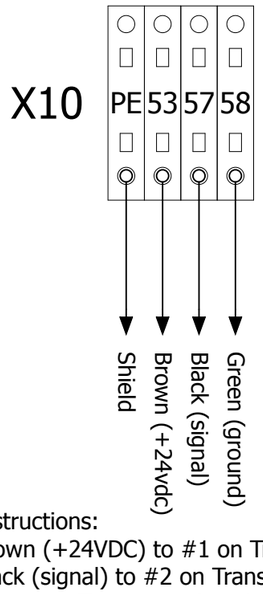

Instructions:
Brown (+24VDC) to #1 on Transducer (Supply)
Black (signal) to #2 on Transducer (Common)
Discharge Transducer is a 4-20mA device

Typical Plug Style Transducer

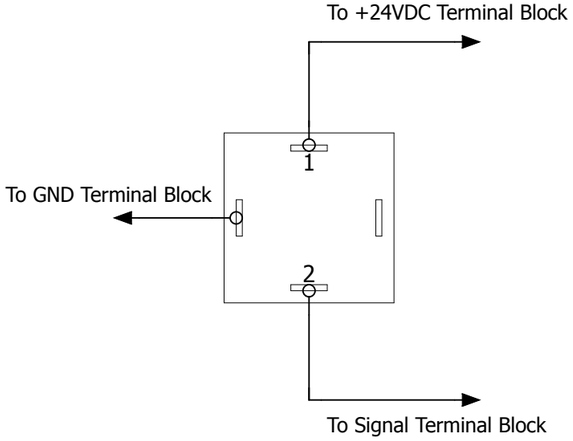

← PREVIOUS PAGE

NEXT PAGE →

1106726	1/8/2013	24081	Drawer	GMUEE
			Date	12/6/2012
			Approved	GMUEE
Change Note	Date	Name	Date	12/6/2012

HYDRO MPC MONITORING DEVICE WIRING

GRUNDFOS

MONITORING DEVICE WIRING

DRAWING NUMBER: 91142960

PAGE NUMBER: 200

NUMBER OF PAGES: 1

Viewed from SAP-P20 20160920 135837 by GPUJCA Status: Released Version: 00 Eff.Date: 20130108